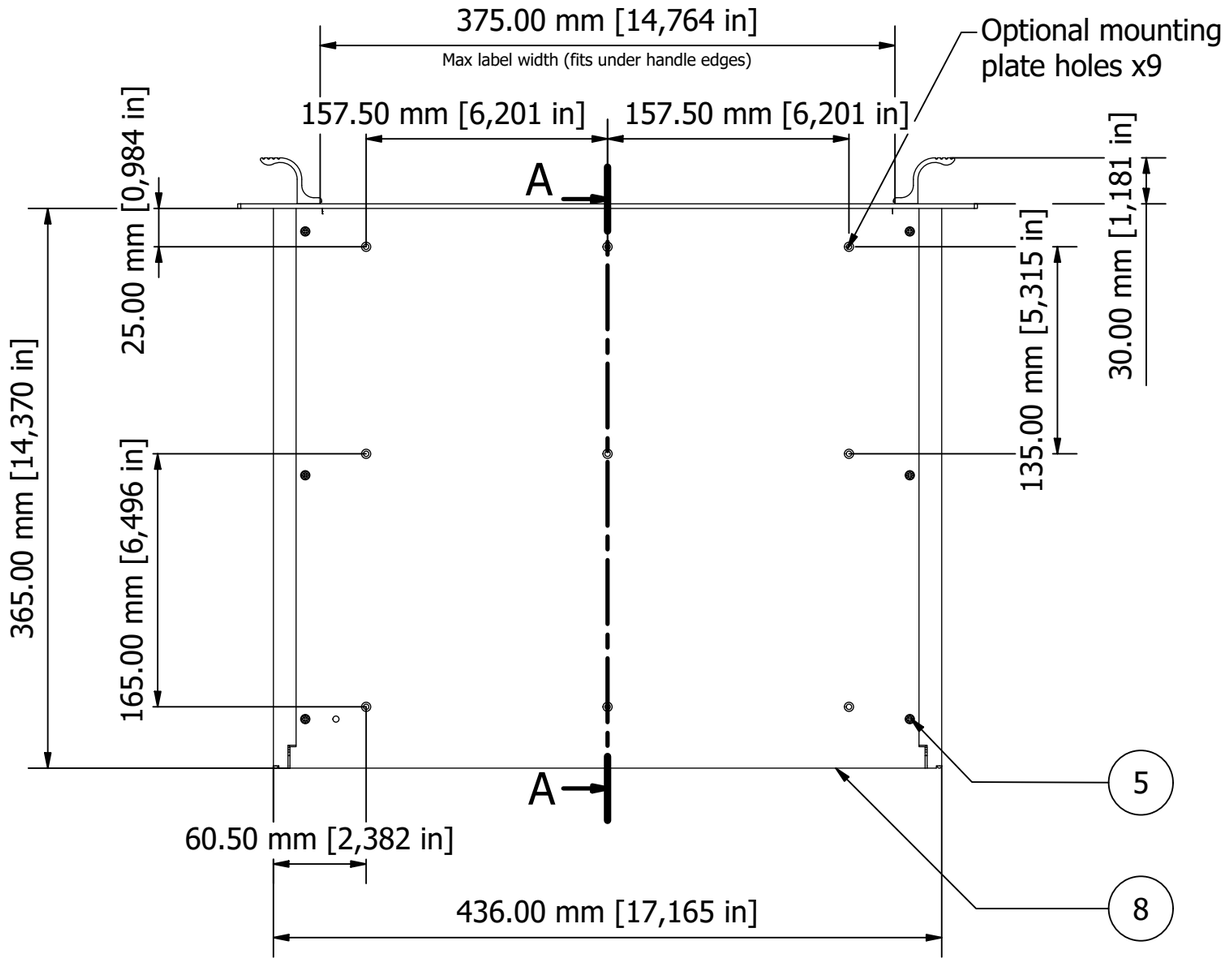

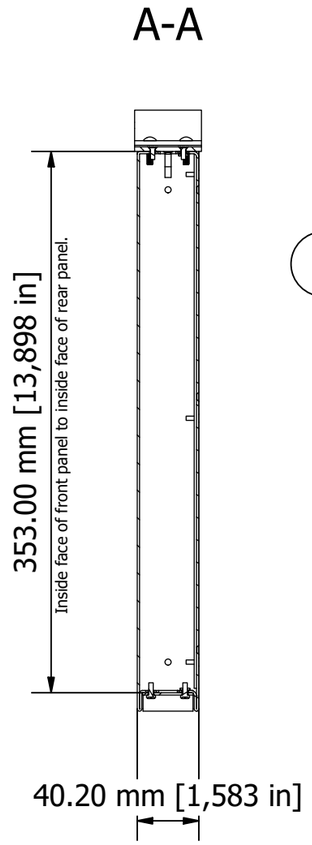

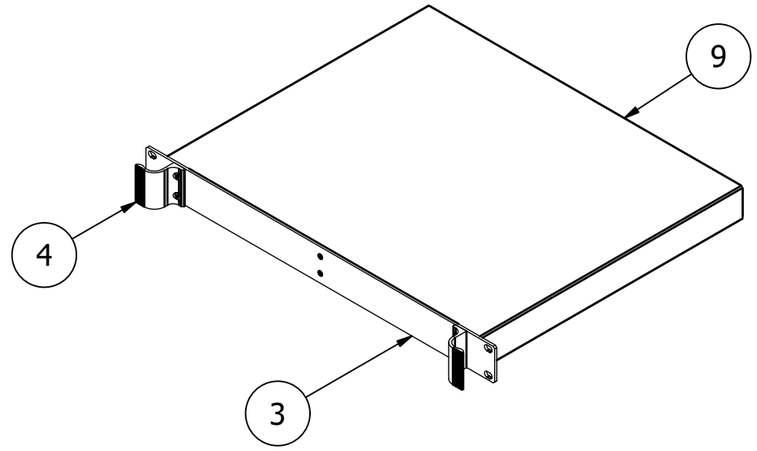

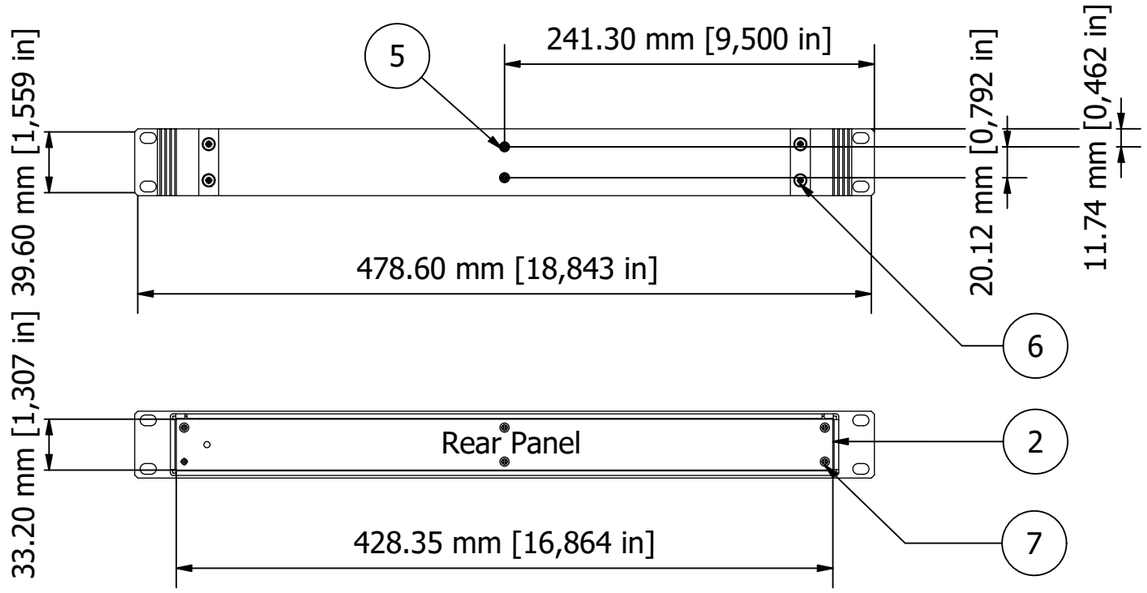

NOTES.
Case metalwork is made from 1.5 mm aluminium and painted RAL 9005 fine texture black.
Front panel is made from 3 mm aluminium with a clear etch & anodise finish.
Handles made from an aluminium extrusion & painted RAL 9005 fine texture black.
All parts are fitted with M4 studs for earth use.

PARTS LIST

ITEM	QTY	PART NUMBER	DESCRIPTION
2	1	M6201019	Rear Panel
3	1	M6219010	Front Panel
4	2	M6200109	Handles
5	8	M3x8 CSK Screw	Assembly Screws
6	4	M4x16 Screw	Front Panel Screws
7	6	M3x8 Pan Screw	Rear Panel Screws
8	1	M6203059	Base Panel
9	1	M620301X	Wrap Around Cover

FIRST ANGLE PROJECTION

Designed by	Description	Date	Scale
L Clark	Combimet 1U x 19" x 365 mm Solid Top	31/07/2019	1:4

METCASE ENCLOSURES
15 Brunel Way, Segensworth East, Fareham, Hampshire, UK. PO15 5TX
Tel: +44 (0)1489 583858 Email: metcase@okw.co.uk

METCASE www.metcase.com

Part Number	Issue	Sheet
M6219129	1	1 / 1